These dimensions are taken from my own experience.
Your dimensions may need to take into account wear and tear

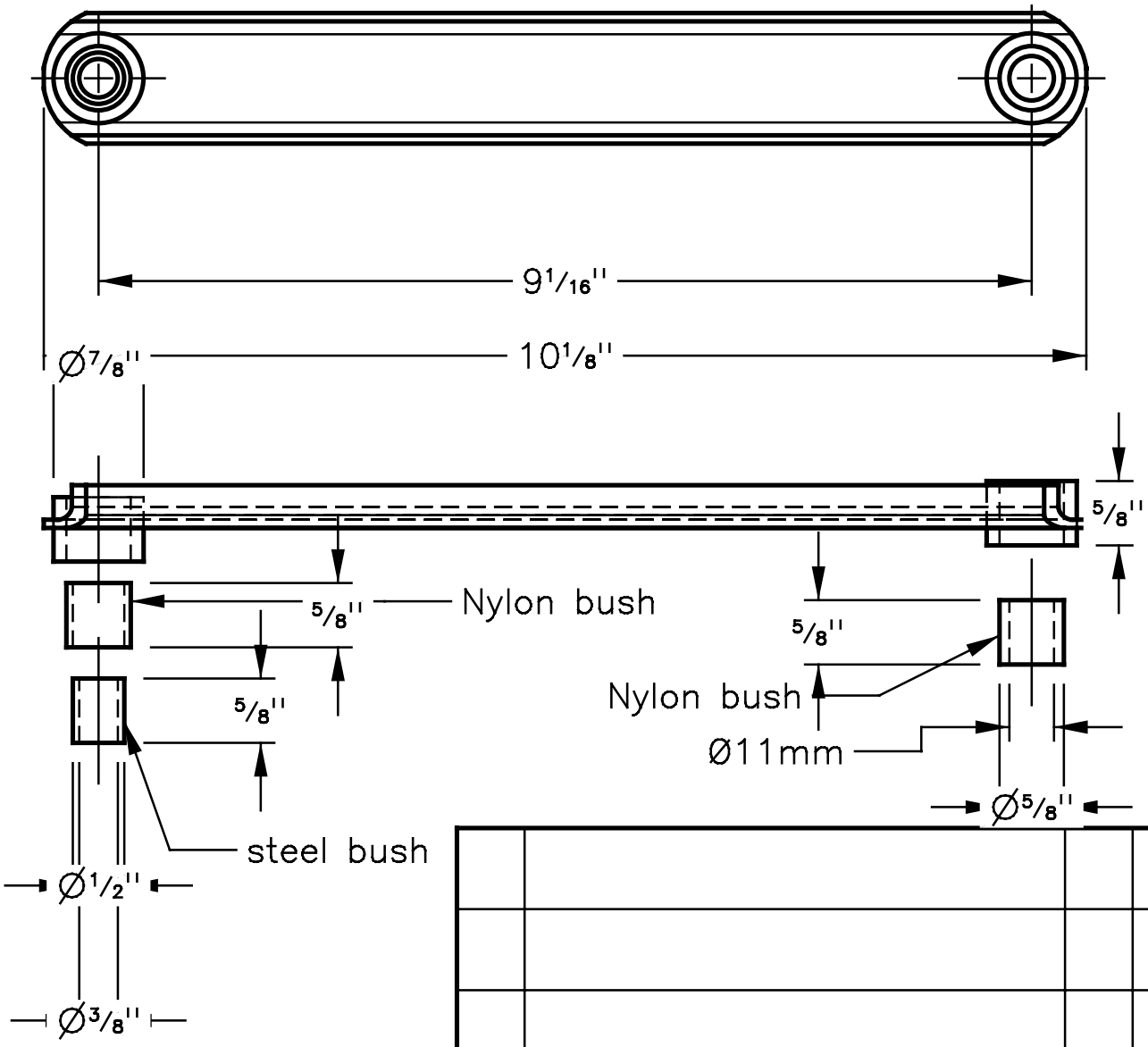

REV	DESCRIPTION	BY	DATE

TITLE Torque arm
For the Square frame

SCALE	DATE
DRAWN BY	03/14/09
CHECKED BY	
APPROVED BY	

PROJECT NUMBER	DRAWING NUMBER

DRAWING SHEET – A4, PORTRAIT